Natural Lands

Bluebird nest box plans

BY JIM MOFFETT

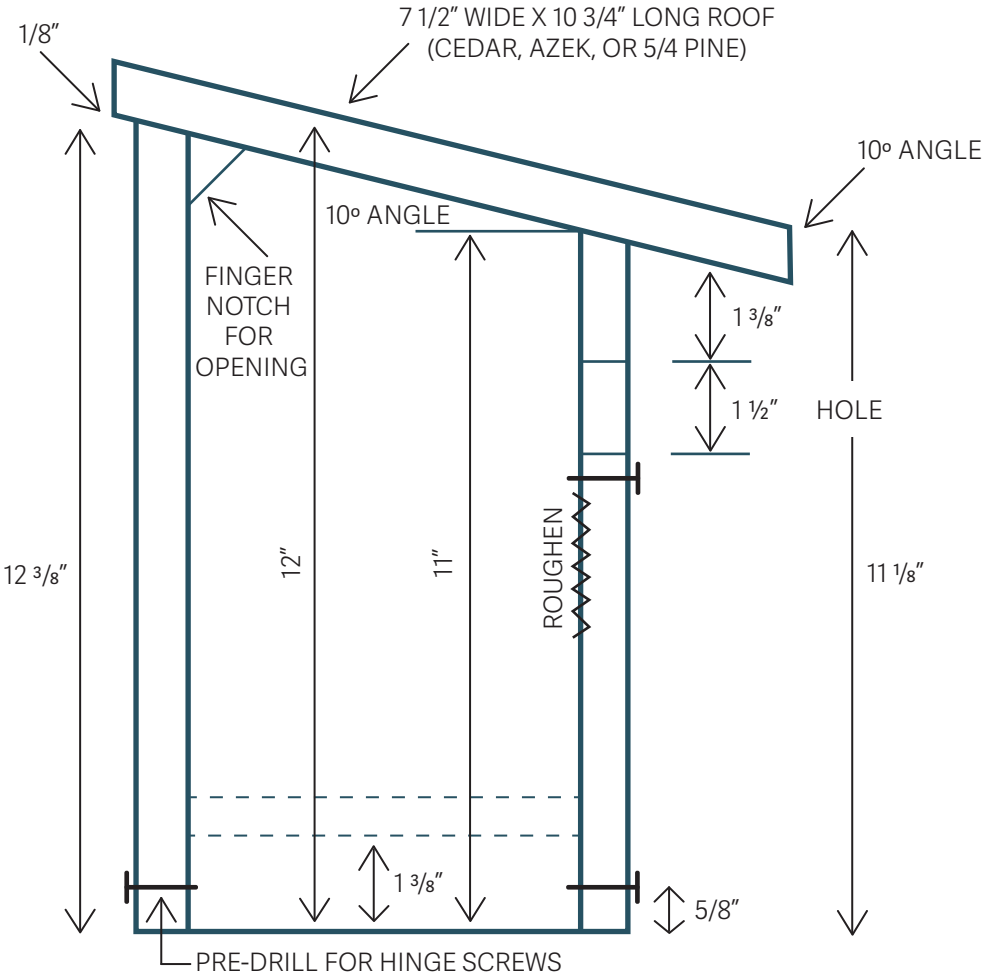

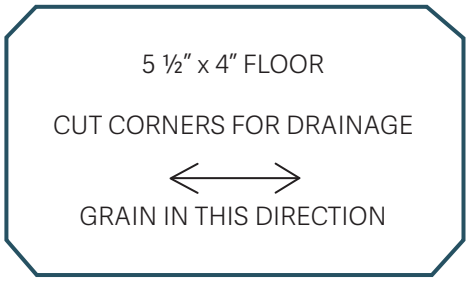

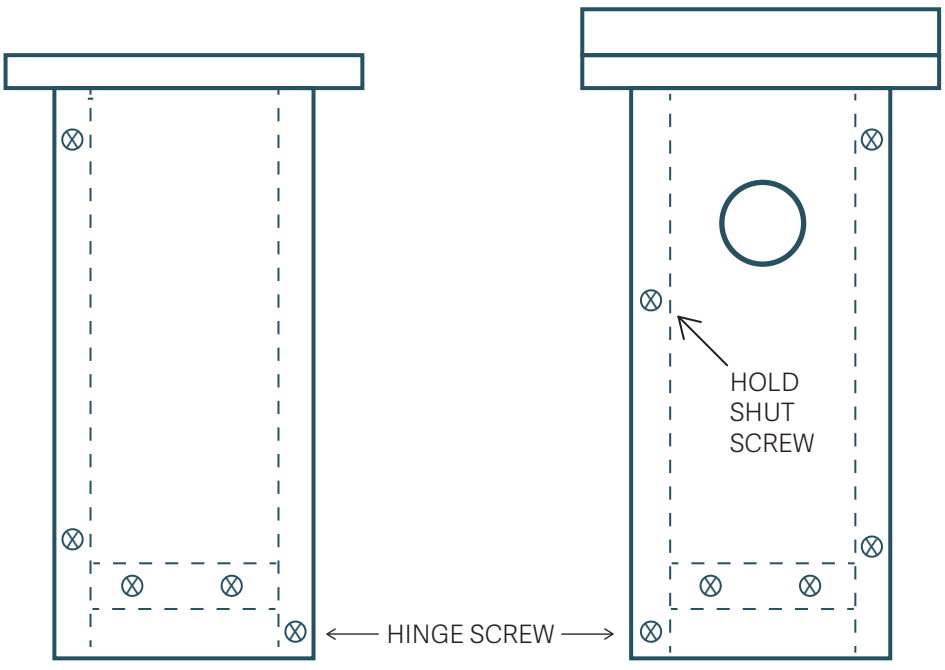

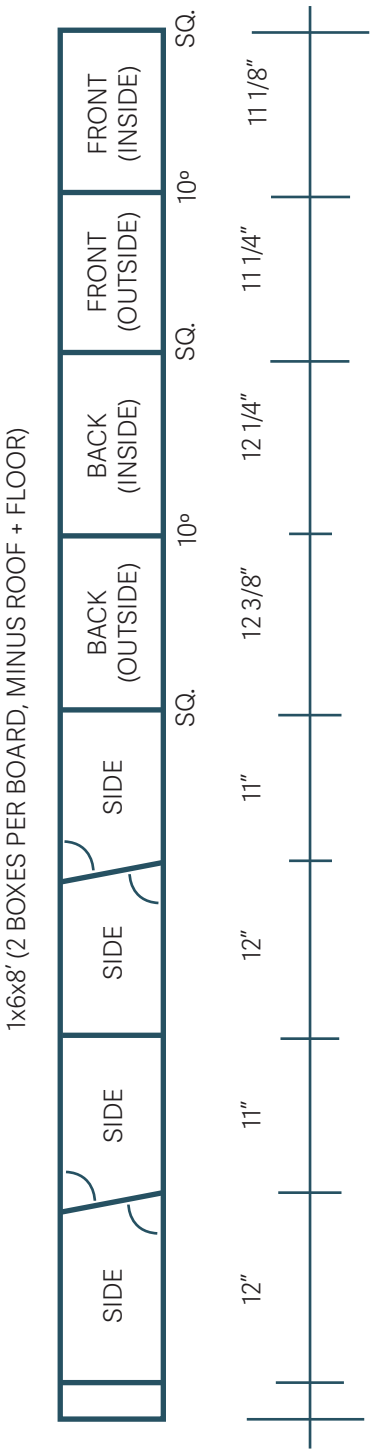

Natural Lands

Bluebird nest box plans *cont.*

BY JIM MOFFETT

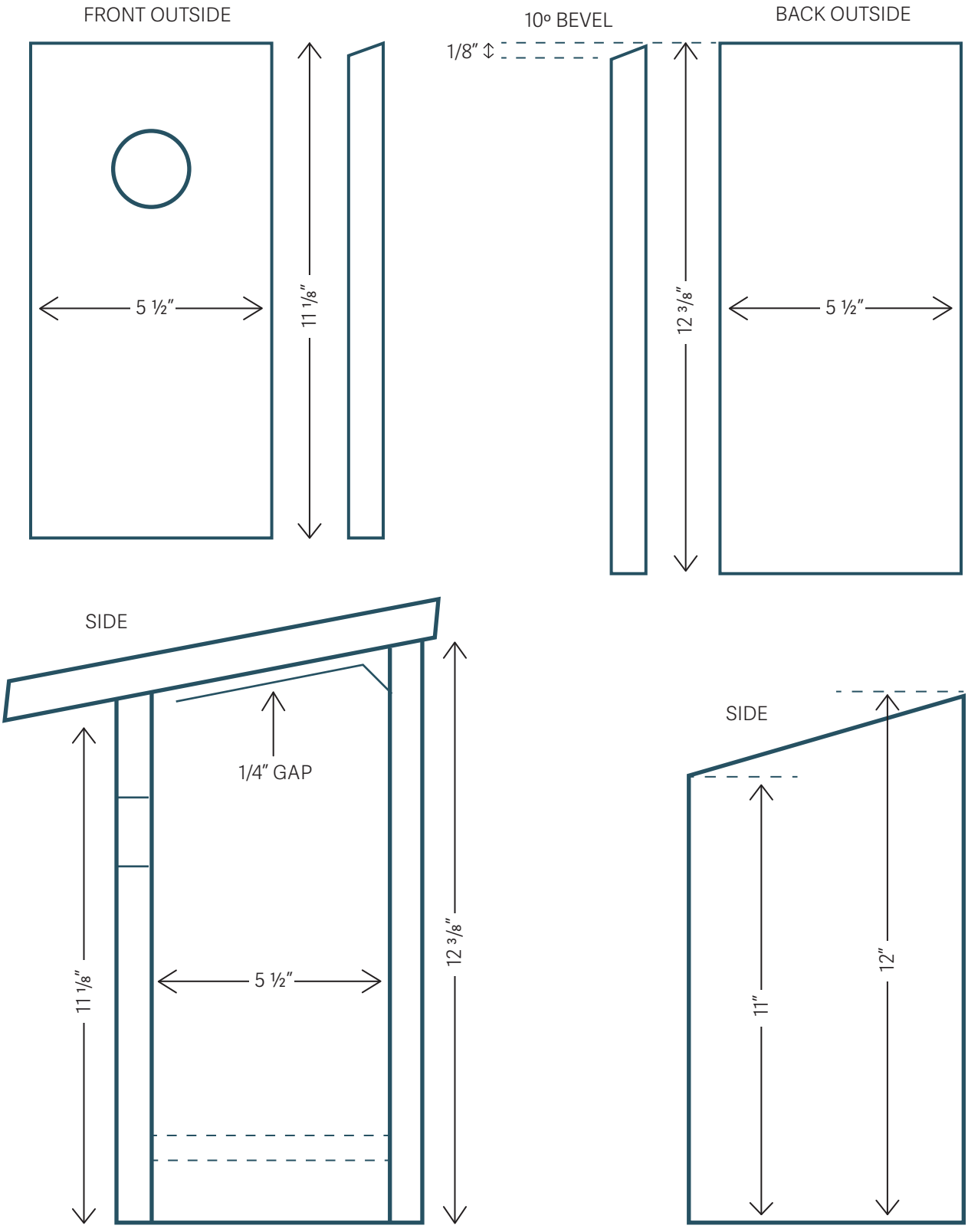

IF MONITORING WITH A CELLPHONE, CUT ONE SIDE DOWN TO ¾" IN INSTEAD OF ¼" IN FOR A "CELLPHONE SLOT"

Natural Lands

Bluebird nest box plans *cont.*

BY JIM MOFFETT

